Shaft Collar

Thunderbots - Colin Wang

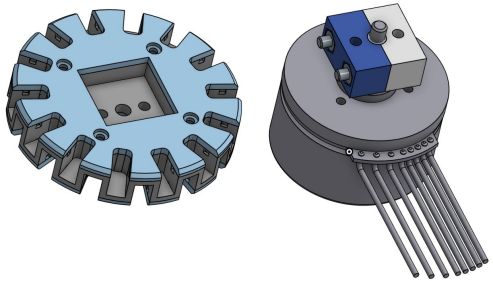

Problem definition

The wheel needs to securely attach to a shaft motor in a reversible fashion. The attachment must be strong enough to allow the motor to rotate the wheels even under the weight of the robot.

Context:

Our current motors have a circular shaft, which is not convenient as the motor needs some kind of edge or hook to hold onto the wheel for it to spin he wheel.

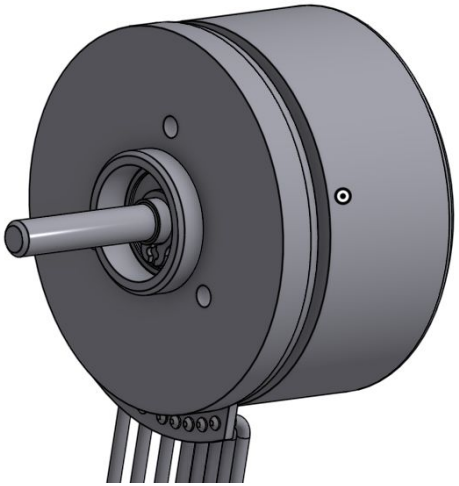

Requirements

User need	Requirements	Value	Units	Comments
Can keep the wheel from spinning against the shaft	Max vertical pressure force	(WEIGHT_OF_ROBOT)/4 + safety offset	N	
Can keep the wheel on the shaft (doesn't slide off) for a round	Useable time	Time of a round + safety offset or DOESNT_SLIP TRUE	s	Spinning the wheel too much may let it slowly slide off the shaft or get stuck on the outer shell. Between rounds we can can push the wheel back in or replace worn parts.
Assembly is simple	Assembly time	5	min	We have to make 32 adjustments for all the robots, and even more under competition pressure if parts wear easily.
Fits in boundaries of robot	Size	Within shaft size, robot boundaries	mm	
Parts are manufactured easily	Material and tool availability	3D PRINT TRUE or WATERJET TRUE or time required to CNC	s	

Ideas

Photo	Option	Pros	Cons	Decision
	McMaster Two Piece Shaft collar	Strong fit, metal, small, simple shape	Pricey ($10+ each…), difficult to attach (no external screw holes	
	Shaft Modification	Can easily grip wheels with no additional collars	Can't change current motors (and will require a $100+ cost for each)	
	Amazing Flange coupling	Can attach to robot easily and not take up space, relatively cheap ($4 dollars each)	Only two screw holes aren't strong enough. Nylon screws are too weak and metal screws tear the shaft	
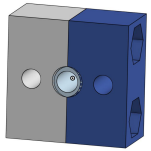	Custom 3D Printed collar	Easily customizable for all requirements, free and easy to make	MAY not be strong enough	YES
	Loctite	Grippy, easy to apply, requires no additional parts.	Hard to remove/undo	If any other options don't work…

Design Overview

Block Tightening Nuts
2x M3 Nuts, 6mm width,
2.5mm thickness

TPU Padding
3.5mm inner diameter
5mm outer diameter
10mm height

Block Tightening Screws
2x M3 Screws
17 mm height
6mm width 3mm thick cap

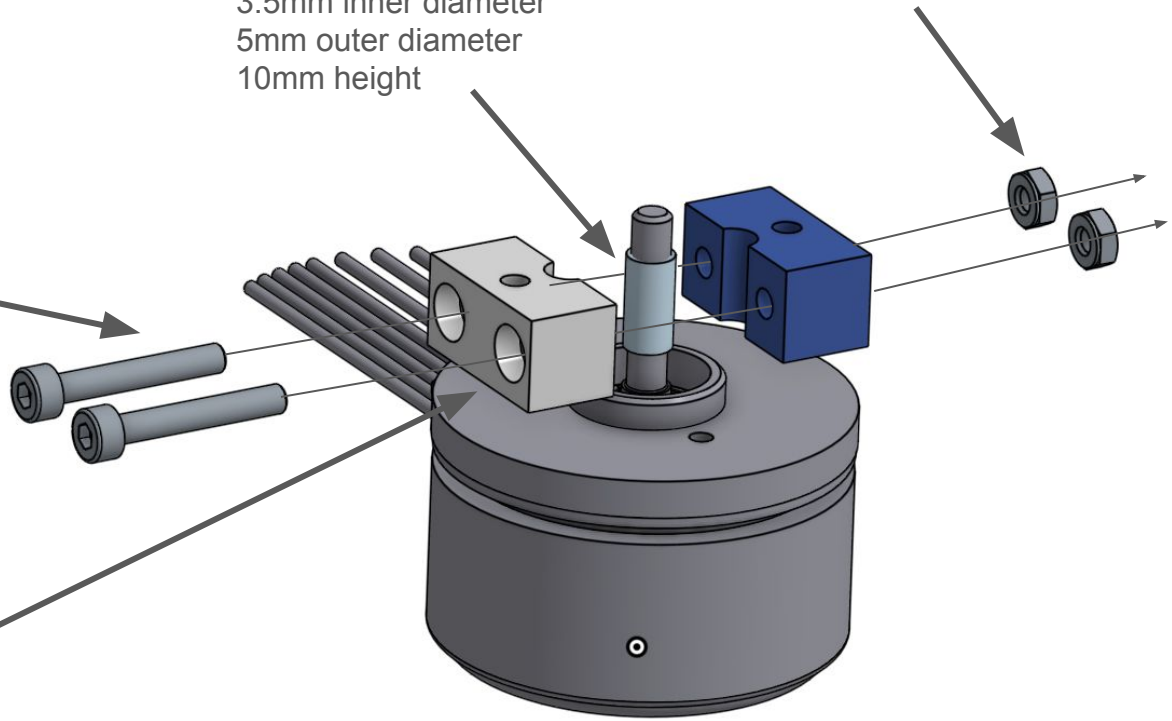

Adapter block
3D Printed screw and nut blocks
10mm high, 10x20mm width each.
M3 screw holes vertically, <4mm
center hole for shaft

Design Overview

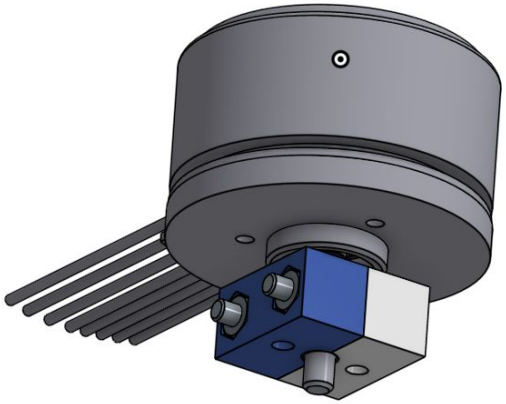

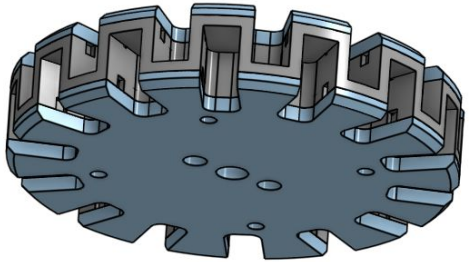

Wheel Tightening Screws
2x M3 Screws
15 mm height
6mm width 3mm thick cap

Previous Cad iterations

V1: no TPU, square mechanism that was squished into the wheel, wasn't strong enough

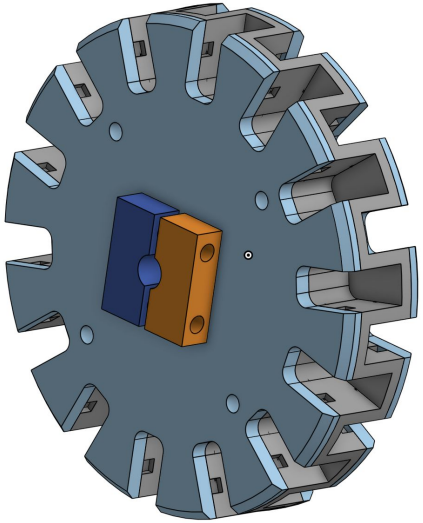

V2: TPU, square mechanism that was squished into the wheel, kept falling off wheel

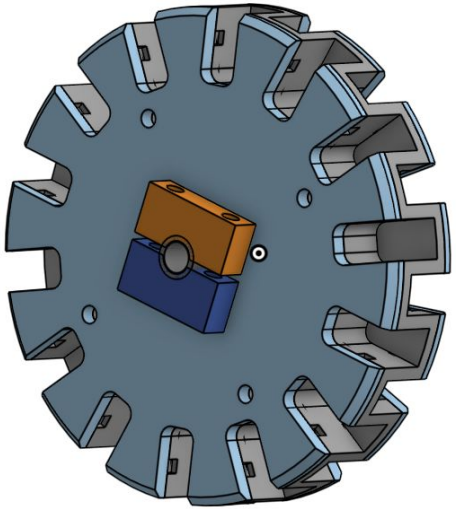

V3: TPU, square mechanism that was squished into the wheel, and could screw into the wheel, was too hard to assemble

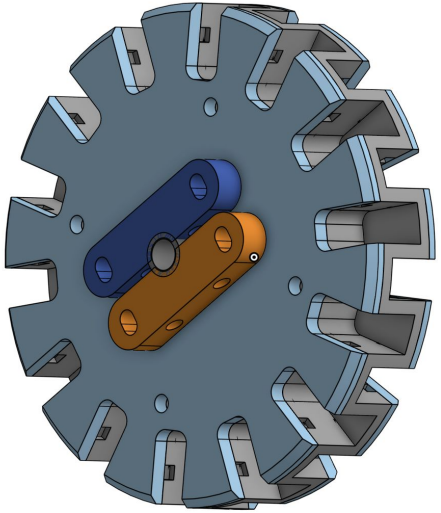

V4: Square with TPU. Main difference from the other 3 is that the square is first tightened onto the shaft, for ease of building.

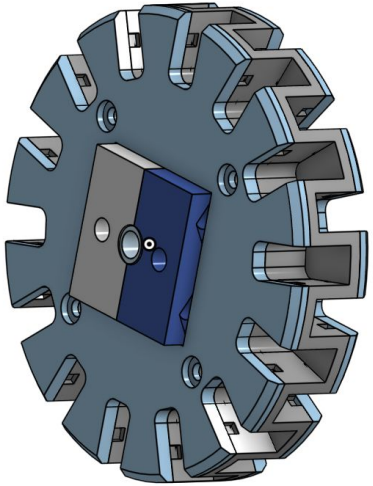

“Force analysis” (of grip and tighteners)

Need to press the TPU onto the shaft

Tpu is 0.5 mm smaller than the shaft

Blocks have a 0.5 space to press the TPU onto the shaft more

Blocks are circular to press the TPU from all directions

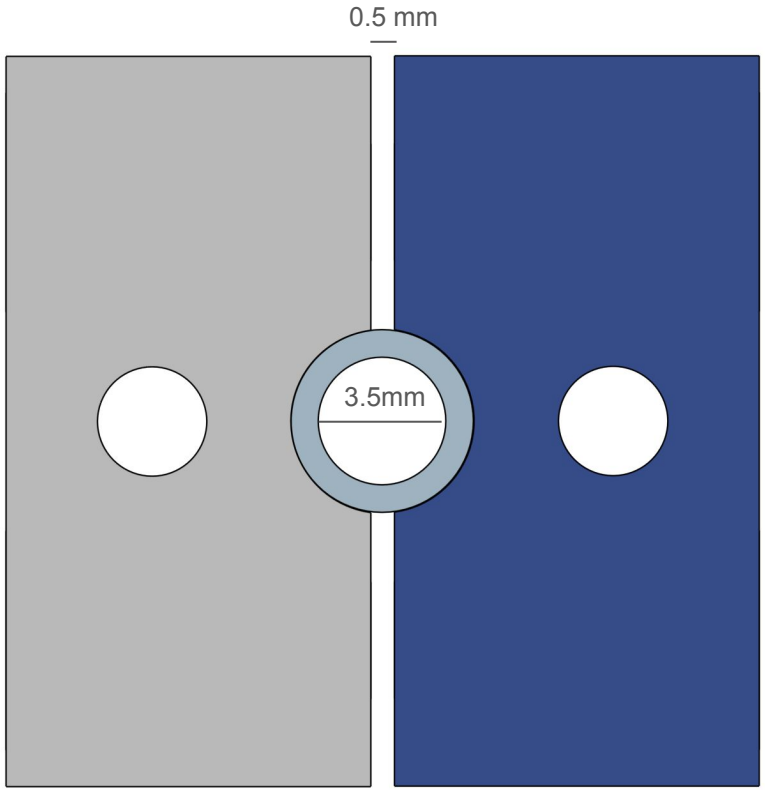

Print Direction

Holes must be spaced out as much as possible

Should be printed perpendicular to gripping screw holes,
Otherwise the screws may split the print due to high stress.

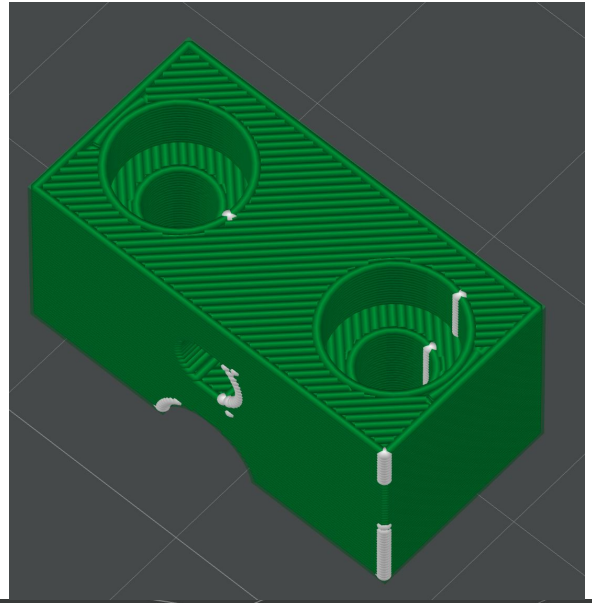

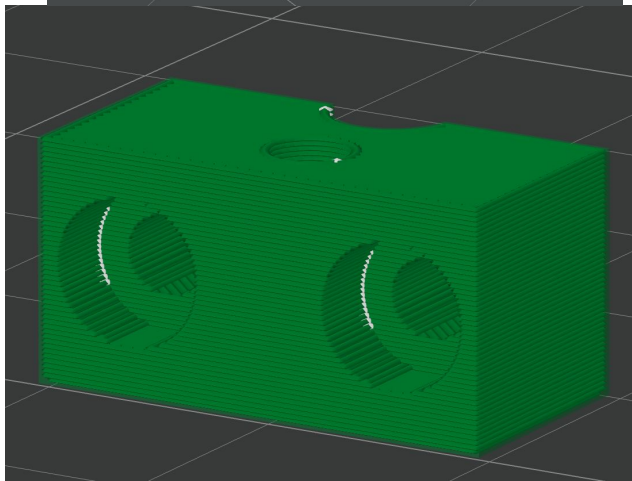

Metal CNC

Part can be Waterjetted and tapped for vertical holes

Center hole will be smaller

Pros:

- We may not need to use TPU, metal on metal strength is strong
- The part will wear less
- We can turn the vertical holes screwable

Cons:

- May take more work to get the vertical holes and a prototype
- More expensive (i think)

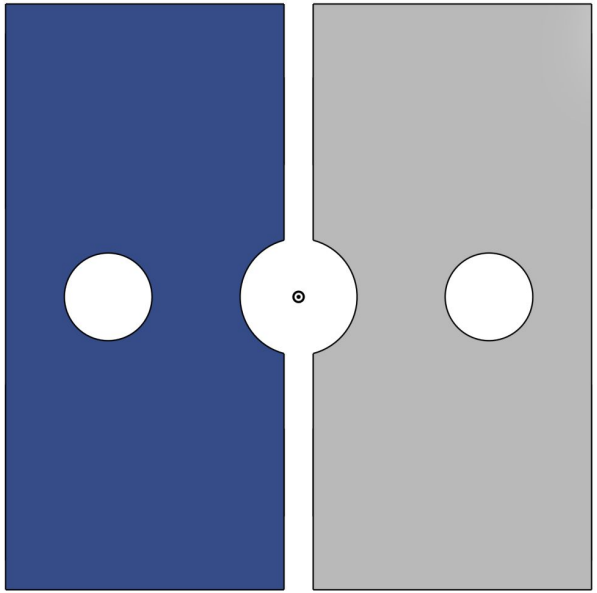

Cost

Max ~$20 USD (~$30 CAD)

This is assuming we don't already have many of the screws

92095A182

$7.19 per pack of 100

Quantity 1 Pack of 100

Delivers Monday

ADD TO ORDER

CAD 3-D Solidworks (2022) Download

Solidworks 2022 and Parasolid files now available

Streamline your design process with our Solidworks Add-In

Available for Solidworks 2017 or newer.

Thread	
Size	M3

90591A250

$2.81 per pack of 100

Quantity 1 Pack of 100

Delivers Monday

ADD TO ORDER

CAD 3-D Solidworks (2022) Download

Solidworks 2022 and Parasolid files now available

Streamline your design process with our Solidworks Add-In

Available for Solidworks 2017 or newer.

Hex Nut Profile	Standard
Fastener Strength Rating	Medium
Material	Zinc-Plated Steel

92095A184

$9.28 per pack of 100

Quantity 1 Pack of 100

Delivers Monday

ADD TO ORDER

CAD 3-D Solidworks (2022) Download

Solidworks 2022 and Parasolid files now available

Streamline your design process with our Solidworks Add-In

Available for Solidworks 2017 or newer.

Thread	
Size	M3

Notes

- CNC, or worst case scenario: Loctite…
- Wearing down of parts
- Size of the wheel matters, how much space can we use?